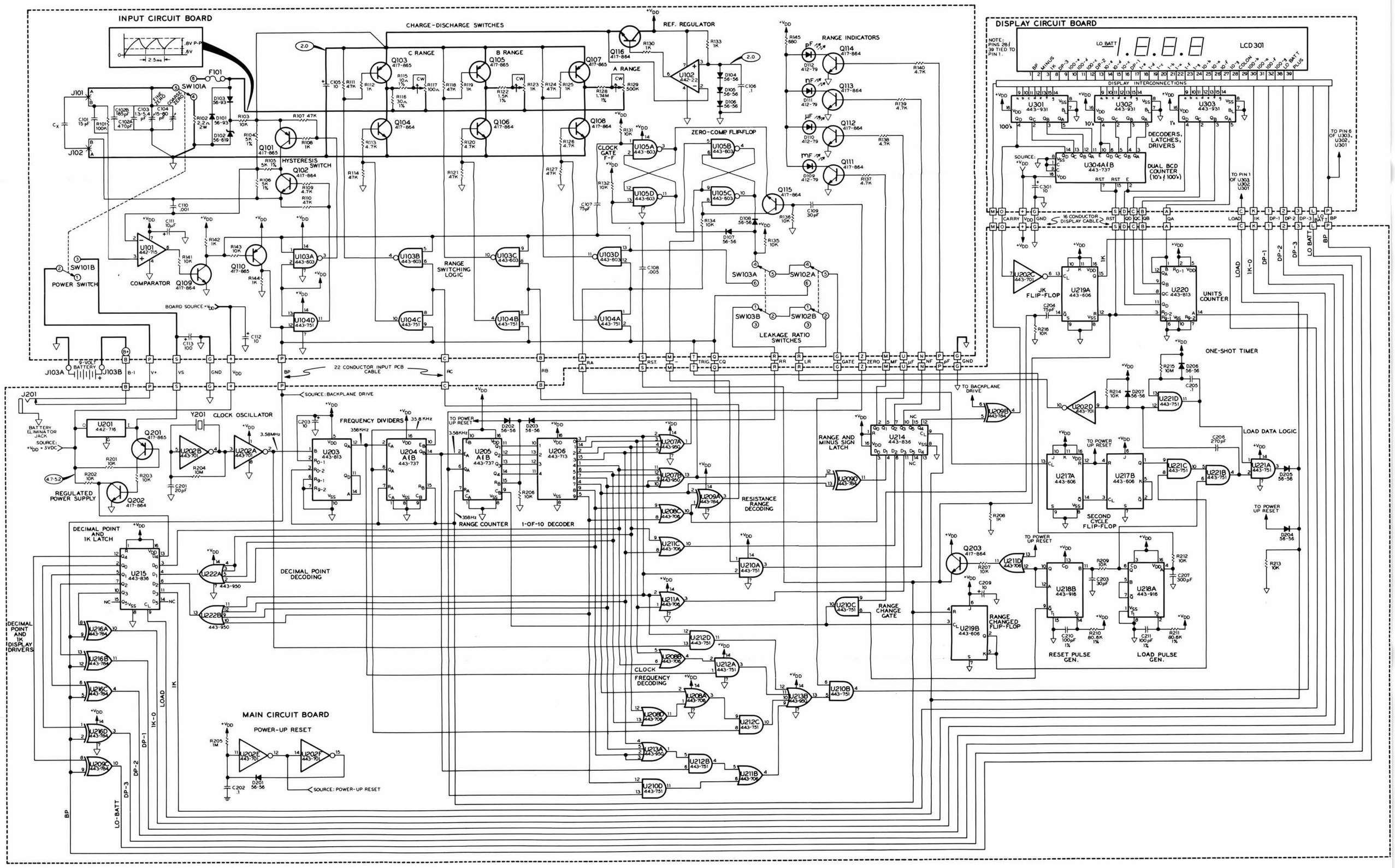

WAVEFORM TABLE

TEST POINT*	WAVEFORMS	
UNKNOWN CAPACITOR VOLTAGE	+2.0 — REF. VOLTAGE; V_2; 1.0 — 1/2 REF. VOLTAGE; V_1; 0; t_1 t_2 t_3; NON SYMMETRY DUE TO SCOPE PROBE SHUNT RESISTANCE.	t_1 = INITIAL BIAS CHARGE. t_2 = DISCHARGE CYCLE = 1ms. t_3 = CHARGE CYCLE = 1.6ms. t_2+t_3 = MEASUREMENT CYCLE = 2.6ms.
COMPARATOR OUTPUT U101 PIN 6	V_{DD} = 5V; t_c; t_m; 0; t = 0 AT POWER UP	t_m = 1st MEASUREMENT CYCLE. t_c = COMPARATOR OUTPUT GOES HIGH.
LOAD PULSE GENERATOR U218A PIN 6	t_c; 0	t_c COMPARATOR OUTPUT GOES HIGH. t_4 = TRIGGER DELAY = 3µs. t_5 = PULSE WIDTH = 15µs. EXPANDED TIME BASE
RESET PULSE GENERATOR U218 PIN 10, 12	t_c; 0	t_6 = DELAY = 1µs. t_7 = PULSE WIDTH = 15µs. EXPANDED TIME BASE
CLOCK GATE FLIP-FLOP U105 A & D PIN 11	t_c; 0	CLOCK GATE INHIBITED; t_8; t_8 = DATA UPDATE AND LOGIC RESET PERIOD = LOAD + RESET PULSES + DELAYS = 35µs. EXPANDED TIME BASE
ZERO COMPENSATION FLIP-FLOP U105 B & C. PIN 10	MUST BE LOW FROM END OF RESET TO INSIDE NEXT LOAD PULSE FOR ZERO COUNT. 0	t_9; t_{10}; t_{10} TO t_9 OF NEXT CYCLE IS LOW TO BLOCK COUNTS DURING ZERO COMPENSATION
POWER-UP RESET PULSE U202, PIN 12	60 µs. TYPICAL	

*AS VIEWED TO COMMON GROUND, 10 MEG. INPUT SCOPE PROBE, NO CAPACITOR INSTALLED (pF RANGE, READING LESS THAN 100 pF).

SCHEMATIC OF THE HEATHKIT® AUTO-RANGING DIGITAL CAPACITANCE METER MODEL IT-2250

NOTES:

1. REFER TO THE "CIRCUIT BOARD X-RAY VIEWS" FOR THE PHYSICAL LOCATION OF PARTS.
2. REFER TO THE COMPONENT IDENTIFICATION SECTION IN THE VARIOUS PARTS LISTS FOR THE TOLERANCE, WATTAGE, AND TEMPERATURE COEFFICIENT OF RESISTORS SHOWN ON THE SCHEMATIC.
3. RESISTOR VALUES ARE IN OHMS (k=1000, M=1,000,000).
4. CAPACITOR VALUES ARE IN µF UNLESS OTHERWISE SPECIFIED.
5. ⏚ INDICATES CIRCUIT BOARD GROUND.
6. □ INDICATES A WIRE CONNECTION TO A CIRCUIT BOARD.
7. ⬭ INDICATES A DC VOLTAGE TAKEN WITH A HIGH INPUT IMPEDANCE (10 MΩ TYPICAL) VOLTMETER FROM THE POINT INDICATED TO CIRCUIT BOARD GROUND.
8. ALL WAVEFORMS WERE MEASURED AT NOMINAL BATTERY VOLTAGE (9V) WITH LOW-CAPACITANCE, 10 MΩ PROBE. LEVELS MAY VARY ±10%.

Part of 595-2450-02

Copyright © 1981
Heath Company
All Rights Reserved
Printed in the United States of America